未注公差/General tolerances(mm)														
0~3	>3~6	>6~10	>10~18	>18~30	>30~50	>50~80	>80~120	>120~180	>180~250	>250~315	>315~400	>400~500	>500	0.1/10
±0.12	±0.18	±0.22	±0.26	±0.31	±0.37	±0.57	±0.80	±0.93	±1.05	±1.15	±1.60	±2.20	±2.50	±2°

(W/O COVER VIEW)

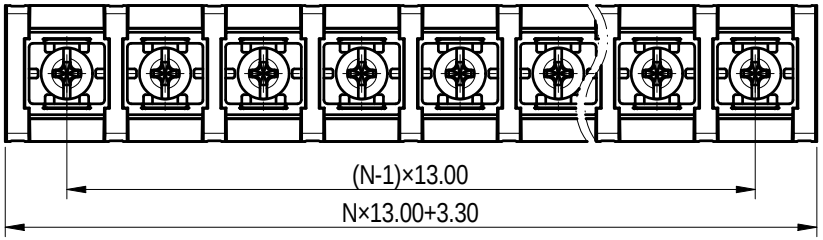

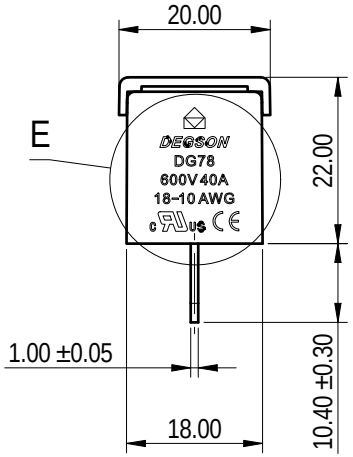

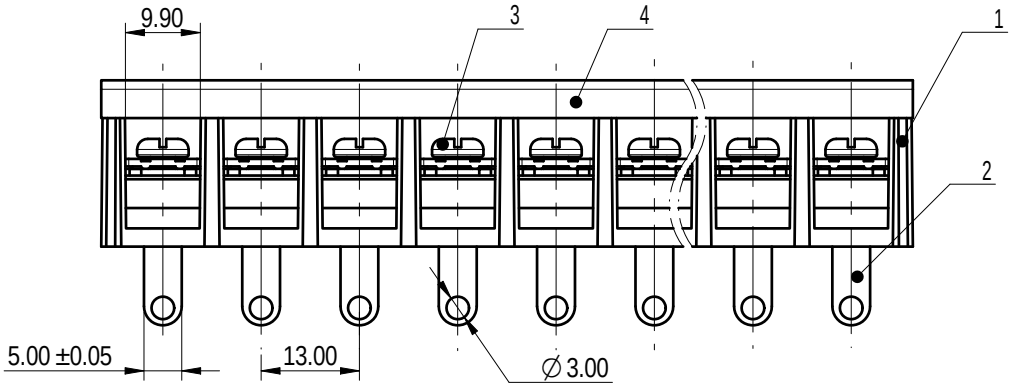

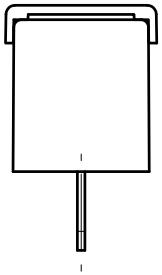

Note:The A&Z(H) in the name means:A(H) and Z(H).

E
2:1

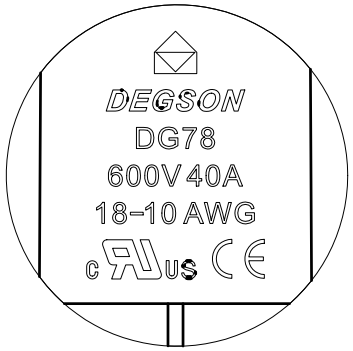

PCB LAYOUT

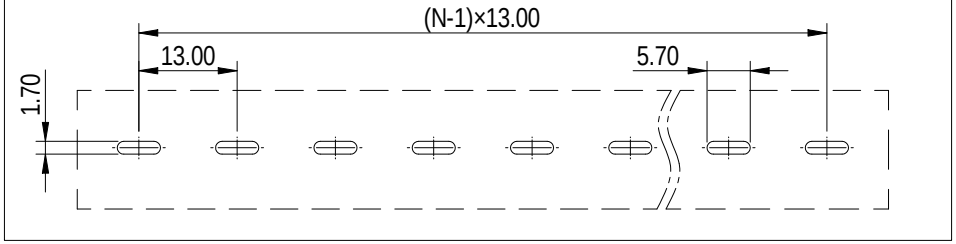

ITEM	NAME OF PART	MATERIAL	NOTES
4	Cover	PC	UL94V-2
3	Screw	Steel	Ni Plated
2	Pin header	Copper alloy	Sn Plated
1	Housing	PA66+25%GF	UL94V-0

UL 标准/UL Standard:	B	C	D
额定电压/电流/Rated Voltage(V)/Current(A)	600/40	600/40	600/10
螺丝扭矩/Torque Tightening(N·m/Lb.in)	M4, 1.2/10.63		
线径范围(硬线和软线)/Wire Range(rigid and flexible)(AWG)	18~10		
间距/Pitch(mm)/线数范围/Poles	13.00/N=02~18P		
使用温度范围/Operating temperature(°C)	-30~+120		
符合RoHS环保要求/Conform to RoHS	Yes		

DEGSON

APPD:	蓝贵凡	2023.11.15
CHKD:	曹利彬	2023.11.15
DRFT:	娄民洁	2023.11.15

A4 mm (inch)

MATERIAL:
SURFACE/COLOR:
MAT NO./REV: - / 00
MAT STATUS: 批量

NAME: DG78H-B-XXP-1Y-00A&Z(H)

DRAWING NO.	TYPE	DRAWING STATUS	SCALE	SHEET
200250574	CUSTOMER DRAWING	已发布	1:1	1/1

REV	ECN	DESCRIPTION	DRFT	DATE
00				

Transfer or duplication of this document as well as the utilization or communication of its contents are prohibited unless explicit authorization is granted. Violations will be liable for compensation. All rights reserved for patent, utility model or designs registrations. 除非经予明确授权，否则禁止转让、复制、利用、交流本文件的内容，侵犯者将负赔偿责任。本公司保留对涉及发明、实用新型和外观专利的所有权利。