Transfer or duplication of this document as well as the utilization or communication of its contents are prohibited unless explicit authorization is granted. Violations will be liable for compensation. All rights reserved for patent, utility model or designs registrations. 除非经予明确授权，否则禁止转让、复制、利用、交流本文件的内容，侵犯者将负赔偿责任。本公司保留对涉及发明、实用新型或外观专利的所有权利。

未注公差/General tolerances(mm)

0~3	>3~6	>6~10	>10~18	>18~30	>30~50	>50~80	>80~120	>120~180	>180~250	>250~315	>315~400	>400~500	>500	0.1/10
±0.12	±0.18	±0.22	±0.26	±0.31	±0.37	±0.57	±0.80	±0.93	±1.05	±1.15	±1.60	±2.20	±2.50	±2°

UL 标准/UL Standard:	B	C	D
额定电压/电流/Rated Voltage(V)/Current(A)	300/8	/	/
IEC 标准/IEC Standard:			
过压类别/Overvoltage Category/污染等级/Pollution Degree	Ⅲ/3	Ⅲ/2	Ⅱ/2
额定电压/电流/Rated Voltage(V)/Current(A)	/	150/8	/
额定脉冲电压(KV)/Rate Impulse Voltage(KV)	/	2.5	/
螺丝扭矩/Torque Tightening(N· m/Lb.in)	/		
线径范围(硬线和软线)/Wire Range(rigid and flexible)(AWG/mm²)	26～16 / 0.14～1.5		
线数范围/Poles	N=18P		
剥线长度/Stripping length(mm)	8～10		
使用温度范围/Operating temperature(°C)	-40～+105		
符合RoHS环保要求/Conform to RoHS	Yes		

DF760-G-03-01Z(H)	
夹片额定电压电流/Rated Voltage/Current	24V/10A
弹片额定电压电流/Rated Voltage/Current	5V/5A
使用温度范围/Operating temperature(°C)	-40～+155
符合RoHS环保要求/Conform to RoHS	Yes
回流焊承受温度/Reflow temperature(°C)	265

Assembly diagram

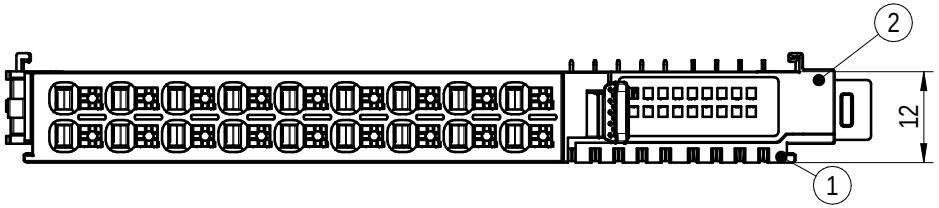

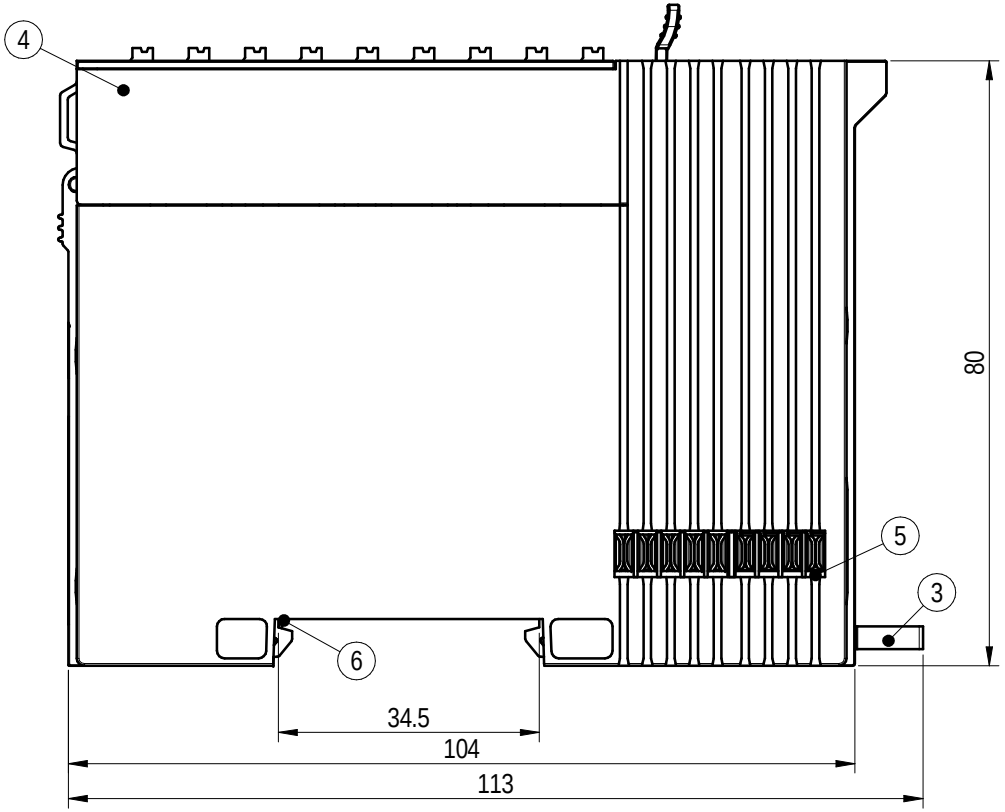

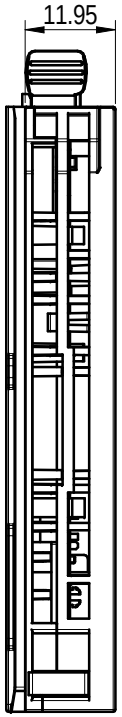

ITEM	NAME OF PART	MATERIAL	NOTES
6	Grounding	Copper alloy	Sn Plated
5	DF760-G-03-01Z(H)	/	/
4	DF760-300-18P-C1-00Z(H)	/	/
3	Card rail foot	PA66	UL94V-0
2	Housing-L	PC	UL94V-0
1	Housing-R	PC	UL94V-0

REV	ECN	DESCRIPTION	DRFT	DATE
00		NEW DRAWING	马恩开	2024.03.26

DEGSON

APPD:	李根劳	2024.03.26
CHKD:	马恩开	2024.03.26
DRFT:	马恩开	2024.03.26

A4 mm (inch)

MATERIAL:

SURFACE/COLOR:

MAT NO./REV: 30060000604-1 / 00

MAT STATUS: work

NAME: DF760-300-1-C1-00Z(H)

DRAWING NO.	TYPE	DRAWING STATUS	SCALE	SHEET
200274118	CUSTOMER DRAWING	work	1:1	1/1